VOLKSWAGEN
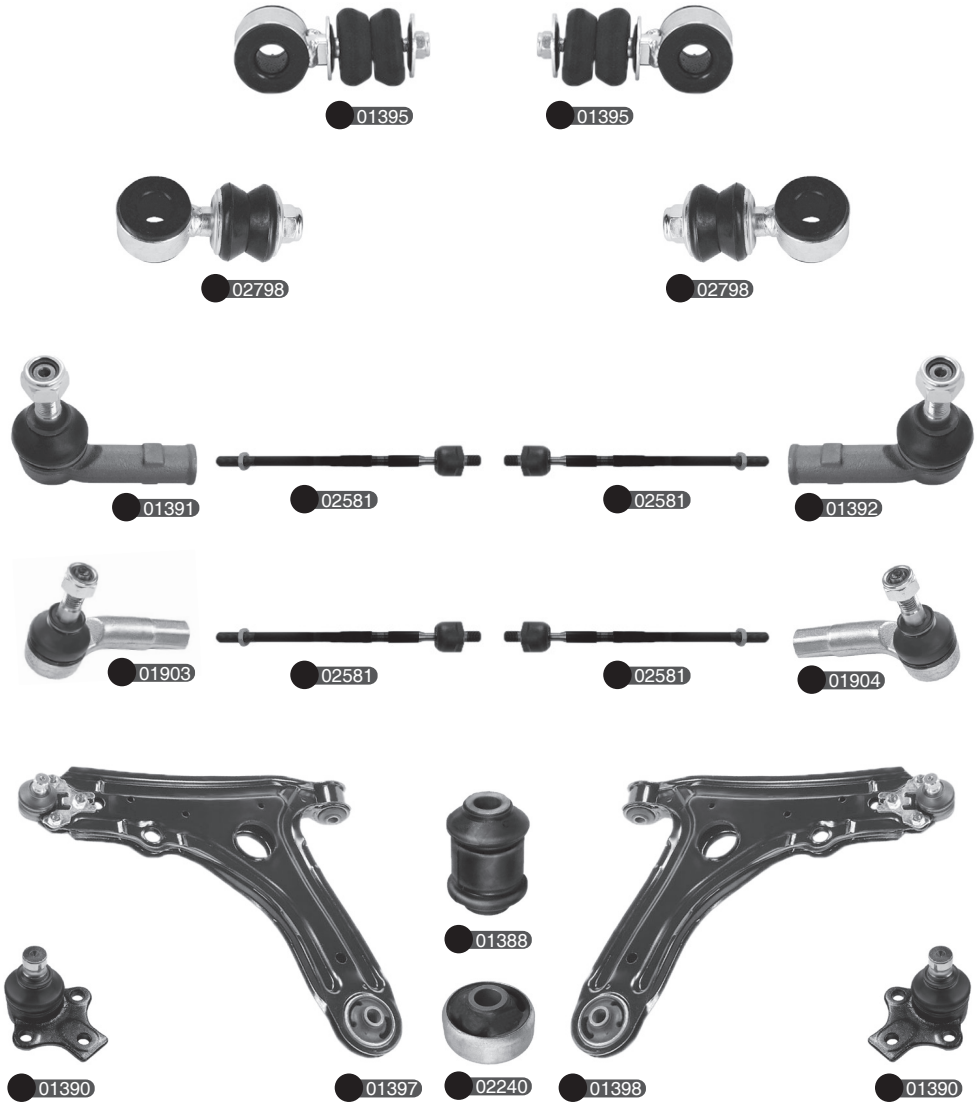
CADDY II (9K9) (11/1995-02/2004)